AI

ARCHITECTURAL INDIRECT

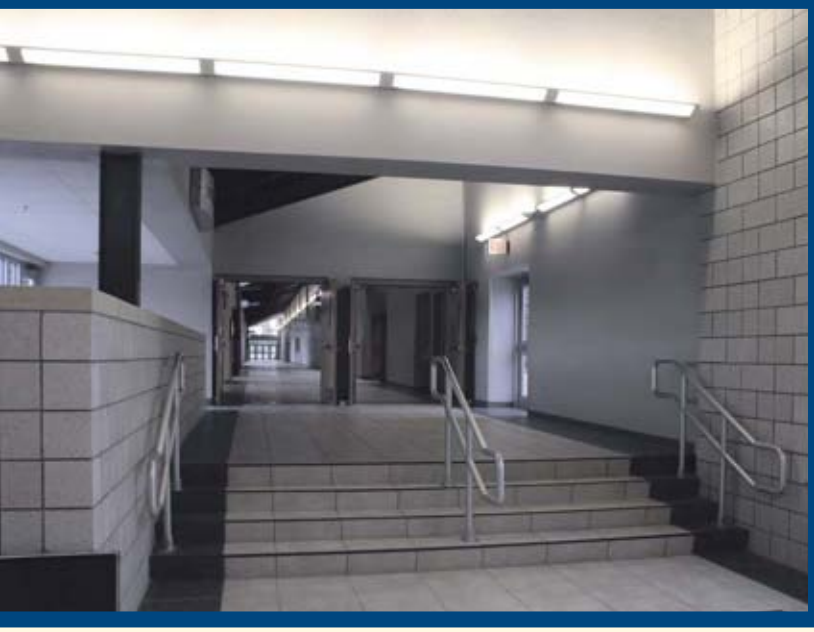

H. E. Williams, Inc. presents an Architectural Indirect (AI) line of fluorescent suspended fixtures. With versatility in mind, this linear series boasts the 'V-shaped' design of the AI2, the gently curved appearance of the AI3 and AI4, and the angular, modern look of the AI5. The AIW indirect wall mount fixture is available as a companion piece or independently for soft, soothing perimeter lighting. With so much variety, the AI Series is the answer for a wide variety of applications to make A Visible Difference® on your next project.

williams®

A Visible Difference

AI2

ARCHITECTURAL INDIRECT VERSION 2

The original fixture in Williams' Suspended Architectural Indirect line, AI2 is ideal for a multitude of environments. Nearly 10" wide with an angular, 'V-shaped' design, AI2 is available with 2, 3, or 4 T5 or T8 lamps in cross-section. AI2 perfectly illuminates office areas, hallways, or classrooms.

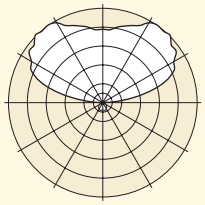

AI2P33-4-232-EB2

Zone	Lumens	%Lamp	%Fixture
0-90	276.	4.7	5.5
90-180	4695.	79.6	94.5
0-180	4971	84.2	100.0

4.7% Downlight/79.6% Uplight

Total Efficiency = **84.2%**

AI3

ARCHITECTURAL INDIRECT VERSION 3

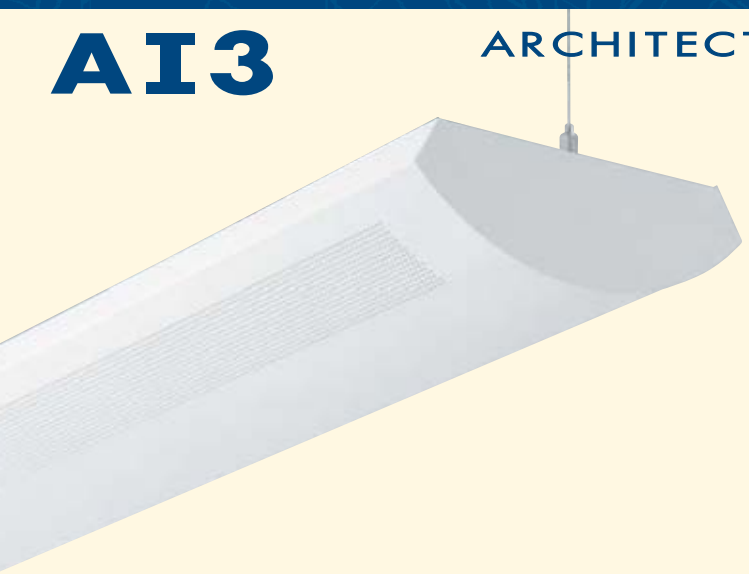

The 9" wide, gently curved profile of the AI3 accommodates up to 4 T5 or T8 lamps in cross-section. Choice of solid bottom, open perforation strips beneath lamps, fully perforated for 15% downlight, or decorative slots provides an array of direct/indirect lighting options.

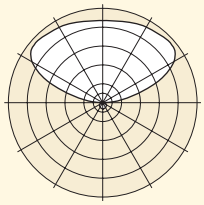

AI3P33-4-332-EB3

Zone	Lumens	%Lamp	%Fixture
0-90	451.	5.0	5.9
90-180	7238.	80.4	94.1
0-180	7689	85.4	100.0

5.0% Downlight/80.4% Uplight

Total Efficiency = **85.4%**

AI4

ARCHITECTURAL INDIRECT VERSION 4

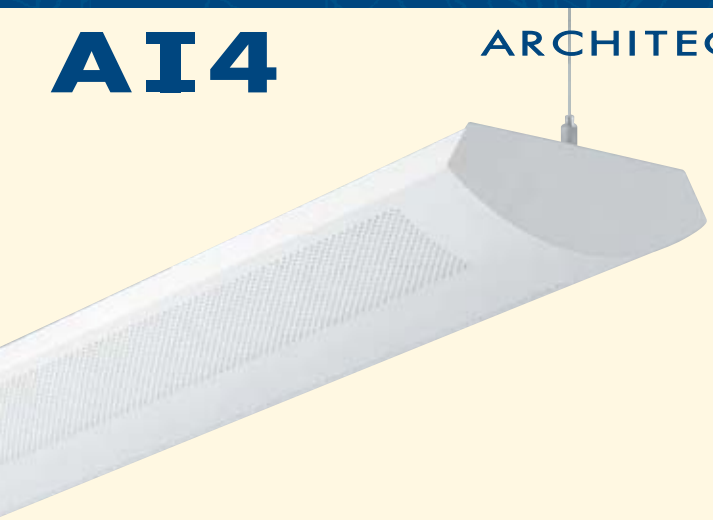

The smaller scale and rounded shape of AI4 is only 2" deep and 7" wide, allowing for a less obtrusive fixture when suspended. Made to fit 2 T8 or up to 3 T5 lamps in cross-section for a variety of lumen packages. AI4 is over 90% efficient and ideal for illuminating various mounting and ceiling heights.

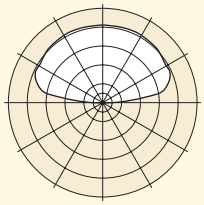

AI4P33-4-154T5H-EB1

Zone	Lumens	%Lamp	%Fixture
0-90	34.	0.8	0.8
90-180	4402.	97.8	99.2
0-180	4437	98.6	100.0

0.8% Downlight/97.8% Uplight

Total Efficiency = **98.6%**

ARCHITECTURAL INDIRECT VERSION 5

AI5

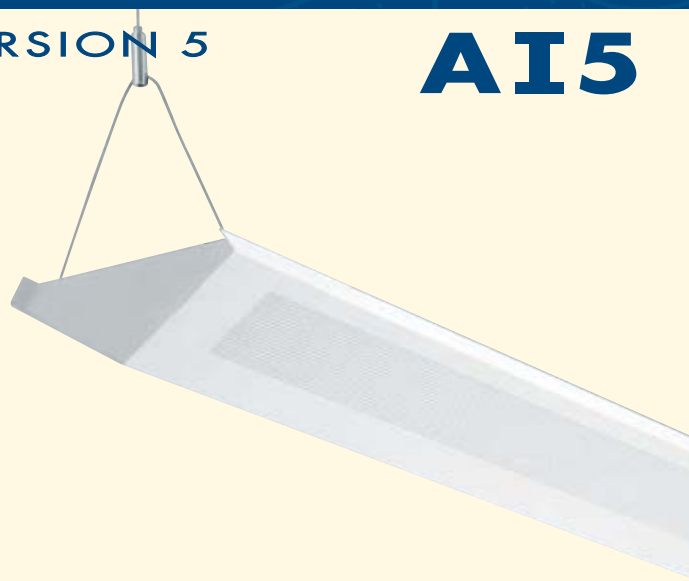

Under 7" wide, the distinctly simple design of the AI5 provides a crisp, clean appearance for architectural applications. The AI5 is an exclusively T5 fixture, over 90% efficient. Precise optics provide wide light distribution for maximum row spacing and highly efficient, uniform illumination.

AI5P33-4-154T5H-EB1

Zone	Lumens	%Lamp	%Fixture
0-90	359.	7.2	7.4
90-180	4514.	90.3	92.6
0-180	4874	97.5	100.0

7.2% Downlight/90.3% Uplight

Total Efficiency = **97.5%**

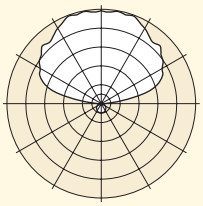

ARCHITECTURAL INDIRECT WALL

AIW

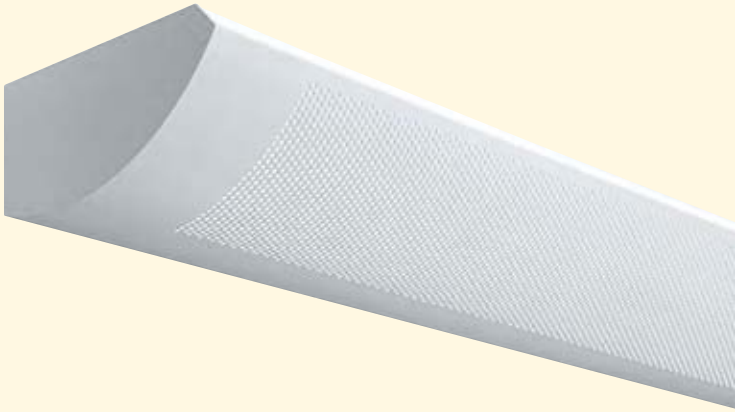

An ideal companion to AI suspended fixtures, decorative and versatile, the AIW provides functional indirect perimeter lighting. Using wall bracket methodology, AIW is designed for easy installation. AIW is perfect for use in offices, over mirrors, down hallways, or anywhere wall lighting is needed.

AIWP33-4-232-EB2

Zone	Lumens	%Lamp	%Fixture
0-90	314.	5.3	8.1
90-180	3587.	60.8	92.0
0-180	3901	66.1	100.0

5.3% Downlight/60.8% Uplight

Total Efficiency = **66.1%**

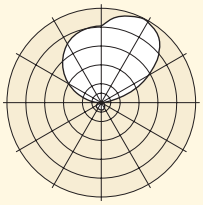

CUSTOMIZE YOUR LIGHTING PROJECT!

Turn Corners With Ease

The AI Series of fixtures wouldn't be complete without the ability to turn corners with the simplest of ease. The precision crafted AI Corners allow the user to turn 90° corners without breaking the flow of the continuous run or to decoratively arrange patterns of fixtures across a large room in a unique way.

Examples:

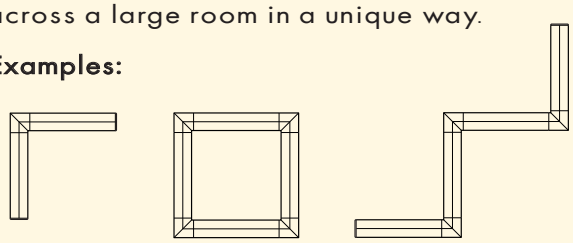

Custom Colors Available

The AI Series features a textured, white polyester powder coated finish with multi-stage iron/phosphate prepared metal. All parts are painted after fabrication. Custom colors are also available upon request — consult factory for complete details.

hewilliams®

ORDERING INFORMATION

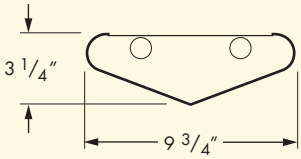

LUMINAIRE SERIES

LENGTH
4 = 4′
8 = 8′

LAMP/WATTAGE TYPE
28T5S = 4′, 28 watt T5
32 = 4′, 32 watt T8
54T5H = 4′, 54 watt T5HO

OPTIONS*

VOLTAGE
120 = 120V
277 = 277V
UNV = 120-277V
347 = 347V

AI2P33-4-232-F-OPTIONS-EB2-120

PERFORATION OPTIONS
P33 = 33% open perforation
SLD = Solid bottom

TOTAL LAMPS
1, 2, 3, 4, 6, or 8
(1, 2, 3, or 4 in cross-section)

FIXTURE TYPE
F = Feeder unit
J = Joiner unit

BALLAST TYPE
Dependent upon total lamps and type of lamps

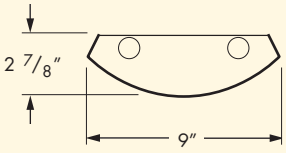

LUMINAIRE SERIES

LENGTH
4 = 4′
8 = 8′

LAMP/WATTAGE TYPE
28T5S = 4′, 28 watt T5
32 = 4′, 32 watt T8
54T5H = 4′, 54 watt T5HO

OPTIONS*
EC5 = 5″ end cap

VOLTAGE
120 = 120V
277 = 277V
UNV = 120-277V
347 = 347V

AI3P33-4-232-F-OPTIONS-EB2-120

PERFORATION OPTIONS
P33 = 33% open perforation
SLD = Solid bottom
(Other options available — consult factory for details)

TOTAL LAMPS
1, 2, 3, 4, 6, or 8
(1, 2, 3, or 4 in cross-section)

FIXTURE TYPE
F = Feeder unit
J = Joiner unit

BALLAST TYPE
Dependent upon total lamps and type of lamps

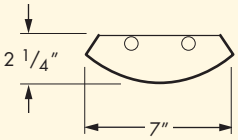

LUMINAIRE SERIES

LENGTH
4 = 4′
8 = 8′

LAMP/WATTAGE TYPE
28T5S = 4′, 28 watt T5
32 = 4′, 32 watt T8
54T5H = 4′, 54 watt T5HO

OPTIONS*

VOLTAGE
120 = 120V
277 = 277V
UNV = 120-277V
347 = 347V

AI4P33-4-254T5H-F-OPTIONS-EB2-120

PERFORATION OPTIONS
P33 = 33% open perforation
SLD = Solid bottom

TOTAL LAMPS
1, 2, 3, 4, or 6 T5
1, 2, or 4 T8

FIXTURE TYPE
F = Feeder unit
J = Joiner unit

BALLAST TYPE
Dependent upon total lamps and type of lamps

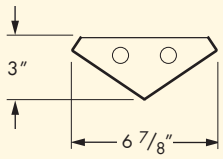

LUMINAIRE SERIES

LENGTH
4 = 4′
8 = 8′

LAMP/WATTAGE TYPE
28T5S = 4′, 28 watt T5
54T5H = 4′, 54 watt T5HO

OPTIONS*

VOLTAGE
120 = 120V
277 = 277V
UNV = 120-277V
347 = 347V

AI5P33-4-254T5H-F-OPTIONS-EB2-120

PERFORATION OPTIONS
P33 = 33% open perforation
SLD = Solid bottom

TOTAL LAMPS
1, 2, or 4

FIXTURE TYPE
F = Feeder unit
J = Joiner unit

BALLAST TYPE
Dependent upon total lamps and type of lamps

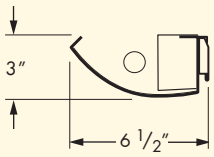

LENGTH
1 = 1′ 4 = 4′
2 = 2′ 6 = 6′
3 = 3′ 8 = 8′

LAMP/WATTAGE TYPE
Variety of lamp options available — consult factory

LUMINAIRE SERIES

OPTIONS*

VOLTAGE
120 = 120V
277 = 277V
UNV = 120-277V
347 = 347V

AIWP33-4-132-F-OPTIONS-EB1-120

PERFORATION OPTIONS
P33 = 33% open perforation
SLD = Solid bottom

TOTAL LAMPS
1, 2, or 4

FIXTURE TYPE
F = Feeder unit
J = Joiner unit

BALLAST TYPE
Dependent upon total lamps and type of lamps

*For complete ordering information, refer to specification sheets