1′ WIDE **SURFACE MOUNT**

11

SERIES JOB TYPE VOLTAGE

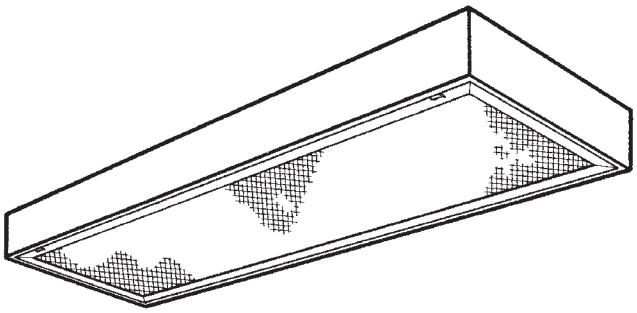

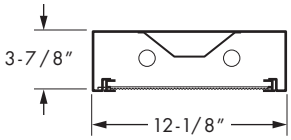

SPECIFICATIONS

- HOUSING — 20-gauge die-formed, welded C.R.S.
- DOOR FRAME — 20-gauge C.R.S. or 0.050″ extruded aluminum with mitered corners. Fully-enclosed spring-loaded cam latches.
- SHIELDING — Clear acrylic prismatic lens standard.
- FINISH — 92% minimum average reflective white powder coat with multi-stage iron/phosphate prepared metal.
- ELECTRICAL — Electronic ballast standard, either instant start or programmed start, rated Class P.
- LABELS — UL/CUL listed as fluorescent luminaire suitable for dry or damp locations.
- MOUNTING — Surface or suspended.

FEATURES

- Fully-enclosed spring-loaded cam latches allow years of hassle-free maintenance.
- Mitered corners provide clean, crisp appearance with no visible rivets or screws.
- Welded end plates ensure durable, rigid construction.
- Fully gasketed door minimizes contaminants.
- Ballast secured by two captive bolts and nuts to ensure a tight, reliable fit for maximum heat dissipation and minimal ballast noise.
- All parts painted after fabrication to facilitate installation, increase efficiency, and inhibit corrosion.
- This fixture is proudly made in the USA.

ORDERING INFORMATION

Submittal

	SERIES		NOM. LENGTH		TOTAL LAMPS	WATTAGE/ TYPE		DOOR FRAME	SHIELDING		OPTIONS		BALLAST		VOLTAGE
EXAMPLE:	**11**	–	**4**	–	**2**	**32**	–	**F**	**A12125**	–	**OPTIONS**	–	**EB2**	–	**UNV**

SERIES

11	Surface Mount, 1′ wide, Solid Sides

NOMINAL LENGTH

2	2′
4	4′

TOTAL LAMPS

1, 2, or 3

LAMP WATTAGE/TYPE

14T5S	2′, 14-watt T5
17	2′, 17-watt T8*
24T5H	2′, 24-watt T5HO
31UN	2′, U-bent, 31-watt T8, 1-5/8″ leg spacing
32U	2′, U-bent, 32-watt T8, 6″ leg spacing
40TT	2′, 40-watt long twin tube
28T5S	4′, 28-watt T5
32	4′, 32-watt T8*
54T5H	4′, 54-watt T5HO (2 lamp max cross-section)

DOOR FRAME TYPE

R	White regress aluminum
F	White flat aluminum
FB	Black flat aluminum
S	White flat steel
SB	Black flat steel
RB	Black regress aluminum

SHIELDING

A12125	#12 pattern acrylic, .125″ thick
A19156	#19 pattern acrylic, .156″ thick
DA	Drop dish acrylic
PC1SS	Nominal 1/2″ x 1/2″ x 1/2″ silver polystyrene
PC2SS	Nominal 1-1/2″ x 1-1/2″ x 1″ silver polystyrene

OPTIONS

BALLAST TYPE

EB1	1-lamp electronic ballast
EB2	2-lamp electronic ballast
EB3	3-lamp electronic ballast

VOLTAGE

120	120V
277	277V
UNV	120 - 277V
347	347V

* Side mounted ballasts required for 1- and 3-lamp cross-sections. Other ballast combinations may require side-mounted ballasts.

Williams® FLUORESCENT LIGHTING

11 SERIES

PHOTOMETRY INFORMATION

Williams Catalog #11-4-232-FA12125-EB2-120
Test Report #8358.0, Dated 07/19/95

Lamp Type: F32T8/735/RS
Lamp Quantity: 2

CANDLEPOWER DISTRIBUTION

VERT. ANG.	HORIZONTAL ANGLE 0	45	90	ZONAL LUMENS
0	1622.	1622.	1622.	
5	1609.	1609.	1608.	153.6
15	1590.	1590.	1594.	451.1
25	1421.	1425.	1422.	658.4
35	1159.	1146.	1146.	721.7
45	812.	804.	820.	629.4
55	504.	479.	522.	446.6
65	276.	196.	273.	229.2
75	173.	130.	168.	150.9
85	58.	50.	55.	59.1
90	0.	0.	0.	

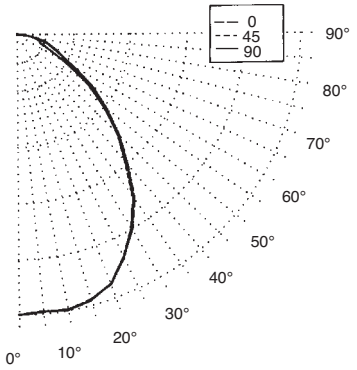

LUMEN SUMMARY

ZONE	LUMENS	% LAMP	% FIXTURE
0 - 30	1263.	22.2	36.1
0 - 40	1985.	34.8	56.7
0 - 60	3061.	53.7	87.5
0 - 90	3500.	61.4	100.0
90 - 120	0.	0.	0.
90 - 130	0.	0.	0.
90 - 150	0.	0.	0.
90 - 180	0.	0.	0.
Total Luminaire 0-180	3500.	61.4	100.0

ZONAL CAVITY COEFFICIENTS

EFFECTIVE FLOOR CAVITY REFL. = .20

CEILING	.80			.70			.50		
WALL RCR	.70	.50	.30	.70	.50	.30	.50	.30	.10
0	.73	.73	.73	.71	.71	.71	.68	.68	.68
1	.68	.66	.63	.66	.64	.62	.62	.60	.59
2	.63	.59	.55	.62	.58	.54	.56	.53	.51
3	.58	.53	.49	.57	.52	.48	.50	.47	.44
4	.54	.48	.43	.53	.47	.43	.46	.42	.39
5	.50	.43	.38	.49	.42	.38	.41	.37	.34
6	.46	.39	.34	.45	.39	.34	.37	.33	.30
7	.43	.35	.31	.42	.35	.30	.34	.30	.27
8	.40	.32	.27	.39	.32	.27	.31	.27	.24
9	.37	.29	.24	.36	.29	.24	.28	.24	.21
10	.34	.26	.22	.33	.26	.22	.25	.21	.18

TOTAL LUMINAIRE
OPTICAL **EFFICIENCY** = **61.4 %**
SPACING CRITERIA: ACROSS= 1.2 ALONG= 1.2

BACK VIEW

INSTALLATION NOTES

A. Midsection punching available only on 4 ft. unit.

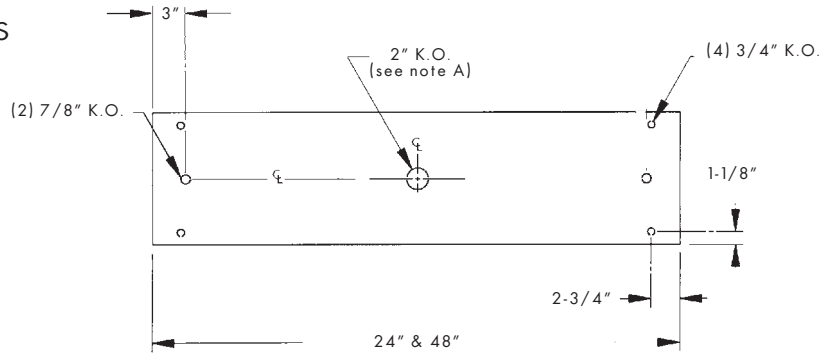

Williams
FLUORESCENT LIGHTING
H.E. Williams, Inc. • Carthage, Missouri • www.hewilliams.com • 417-358-4065 • Fax: 417-358-6015
Information contained herein is subject to change without notice.